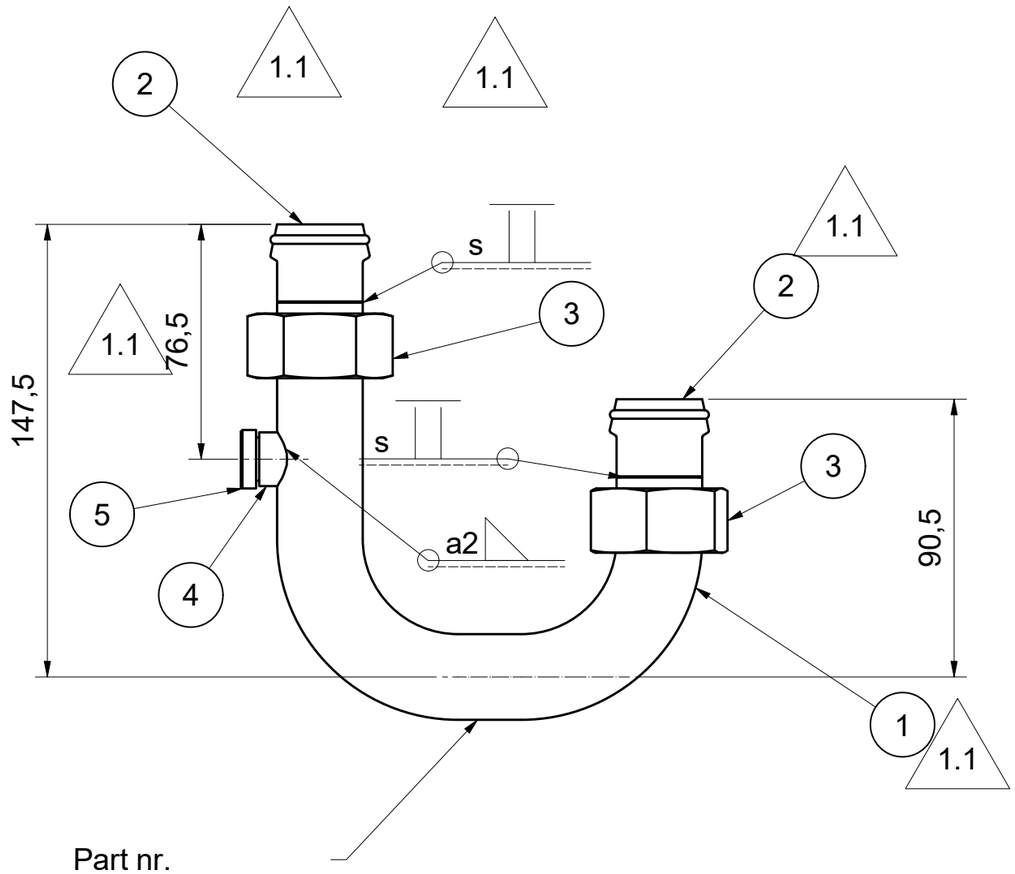

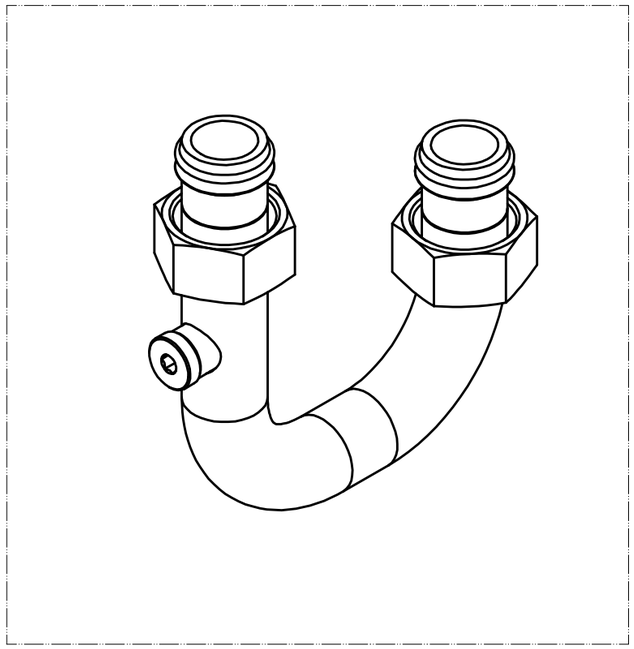

Part nr.
Production date or
work order

NOTE:
- BURRS AND SHARP EDGES REMOVED
- O-RING MUST BE FKM OR FPM
- BENDING RADIUS R=45

NOTE A:
- Dimensions Updated
- Socket position changed.
- Welding nipple is replaced by standard part

Designed, built, tested, certified and marked according European Directive:

Art4. Par 3

Parts List

Pos	Qty	Partnumber	R/S	Name	Material	Comments
1	1		-	PIPE		Ø28x1,5
2	2		S	WELDING NIPPLE		
3	2		S	NUT		
4	1		S	SOCKET		
5	1		S	PLUG		G1/4"

Tolerances, if not indicated, according to:	General tolerances	Welding	Cleanliness of components
	1350K - mK	1356K / B	6160 AIR / A

Name

Material See Drawing

Treatment

Scale	Family	A3	Compare	Owning Unit	Transferred from
Drawn by INEAMG	Blank nr.		Replaces		
Version Drwg	Blank wt Kg	Fini wt. 0.604 kg	Designation	Sheet 1 / 1	
Des checked.	Prod checked.	Approved.	Date 16-02-2024		

STATUS Released

Ed	Position	Modified from	Date	Intr./Appd.	Parent 3D model	Ed . Version 3D
1.1		See Note A	3/19/2024 8:48:57 AM			